Flat Tox RCT - Absorber

The Flat Tox Range is a design born of the collaboration between Jan Morel and Artnovion.

Flat Tox has a discreet fabric design. It excels at controlling first reflections, and is suited to treat a broadband range of frequencies. It is available in a wide range of sizes, designed to create the performance and design your studio deserves.

Features

Type:
Absorber

Absorption Range:
350 Hz to 8000 Hz

Acoustic Class:
B | (aw) = 0,95

Purpose

- First reflection control
- RT reduction
- Extended mid-low frequency absorption
- Reducing excessive reverberation

Recommended for

- Control Room
- Recording Room
- Home Studio
- Broadcast Studio
- Vocal Booth

Performance

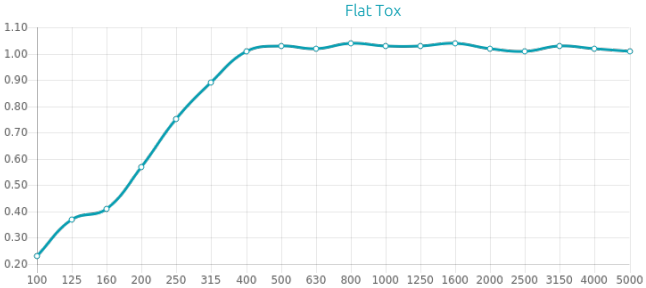

Dimensions

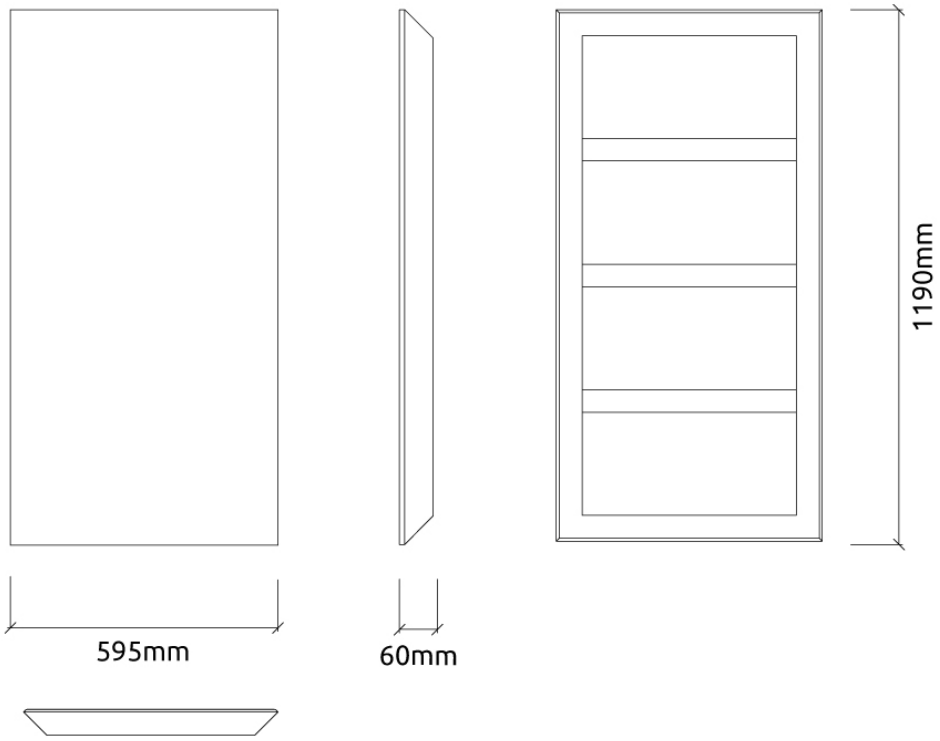

Add-ons

GlueArt

Instant Fix Kit

Integrated Fixing System

Dimensions	**Weight**
FG - SF | 595x1190x61mm	3.44 Kg

Box

Quantity per box: 4

Dimensions: 1235x255x655mm

Volume: 0.206m3

Weight: 16.4Kg

Finishes

Flat Tox RCT - Absorber

(FG - SF) Suede Fabric Finishes

FG | (T0273) Light Ivory

Retail code:
1010224400427311

FG | (T0275) Earth Brown

Retail code:
1010224400427511

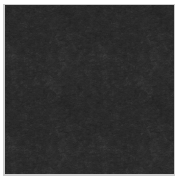

FG | (T0279) Anthracite Grey

Retail code:
1010224400427911

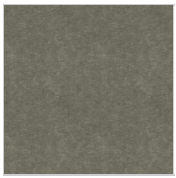

FG | (T0278) Ash Grey

Retail code:
1010224400427811

FG | (T0284) Wheat Beige

Retail code:
1010224400428411

FG | (T0285) Moonlight White

Retail code:
1010224400428511

FG | (T0281) Wine Red

Retail code:
1010224400428111

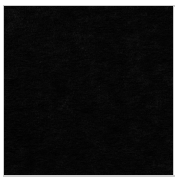

FG | (T0283) Ink Black

Retail code:
1010224400428311

FG | (T0282) Violet Blue

Retail code:
1010224400428211

FG | (T0280) Bottle Green

Retail code:
1010224400428011