Installation guide

Cosmos CS

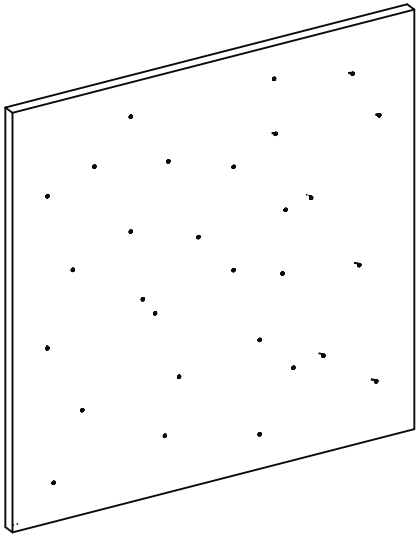

www.artnovion.com

artnovion

1 Front Instalattion

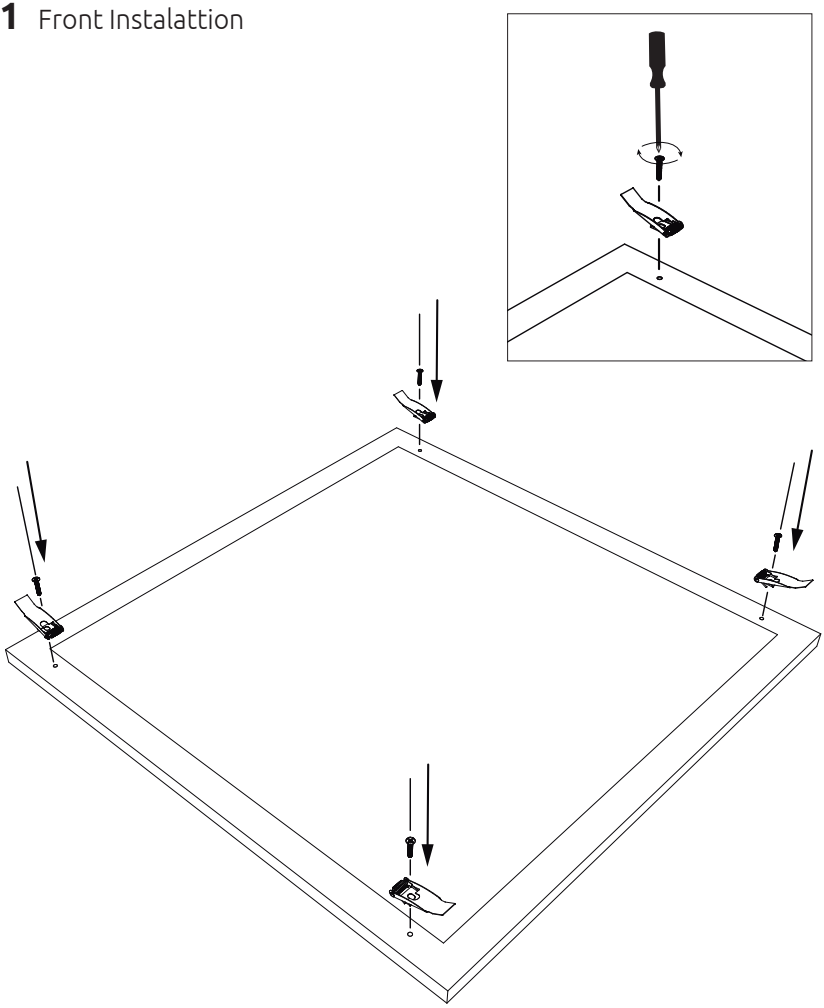

2

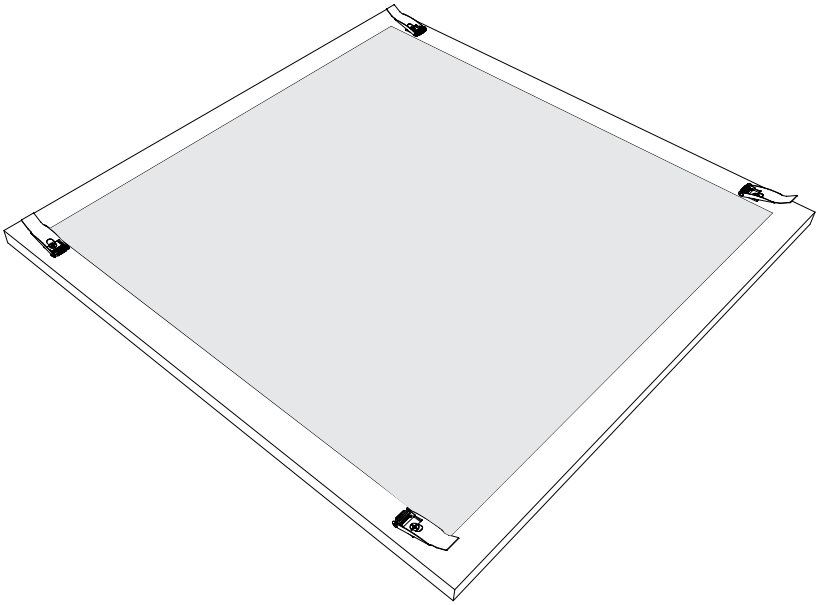

3

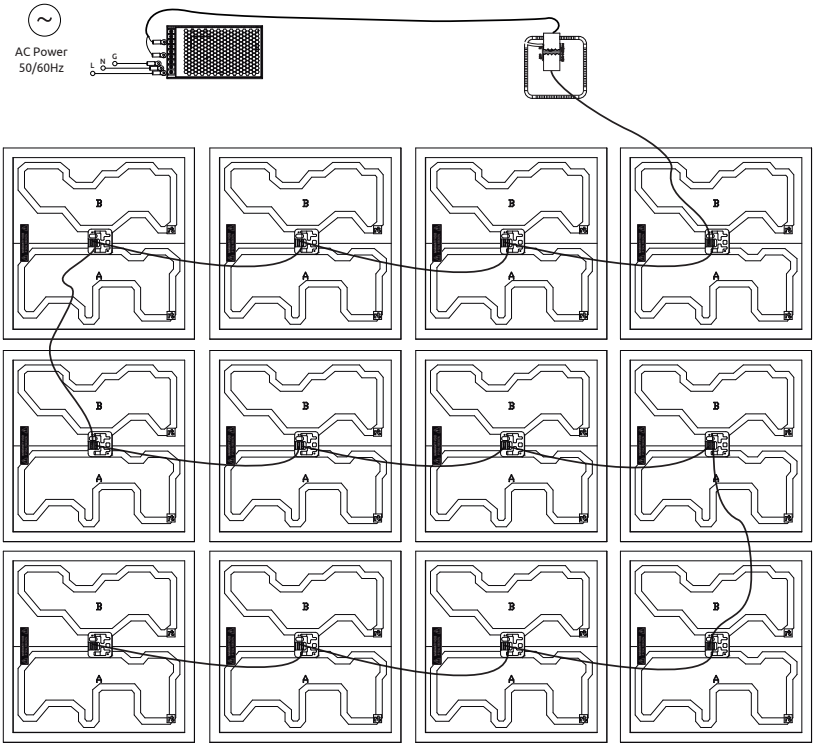

Define the most suitable layout for your installation

i This is just an illustrative example for demonstration

4

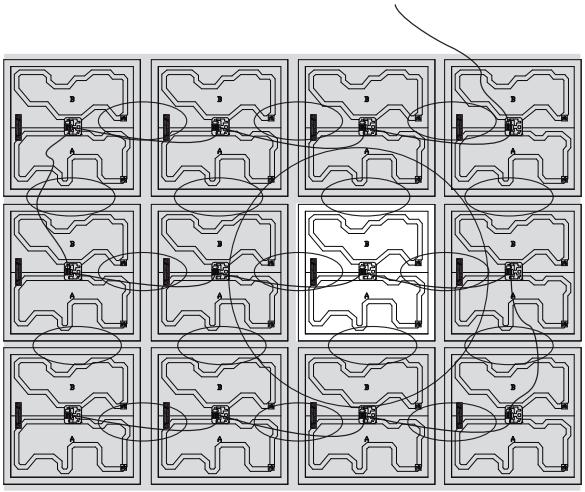

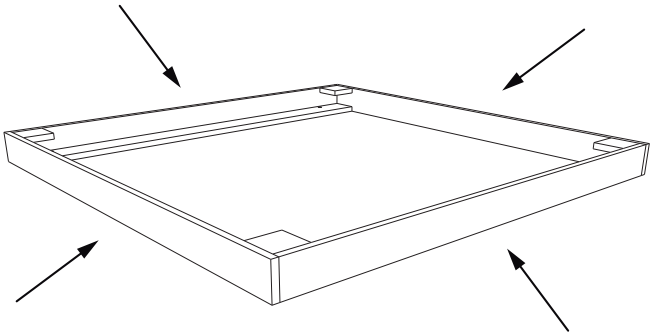

For each frame, locate the edges that will have adjacent Cosmos CS panel

5

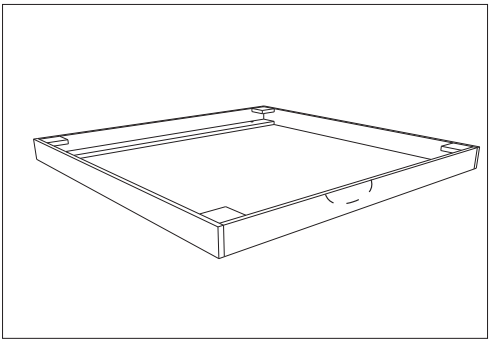

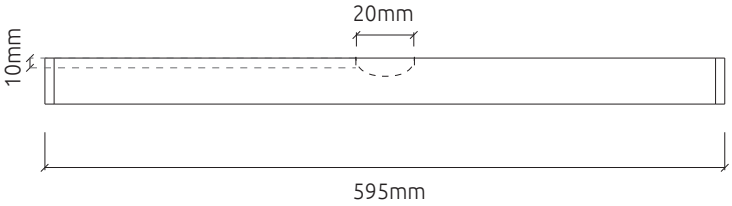

Using a suitable cutting tool, carefully trim those edges
for the cable managment

6

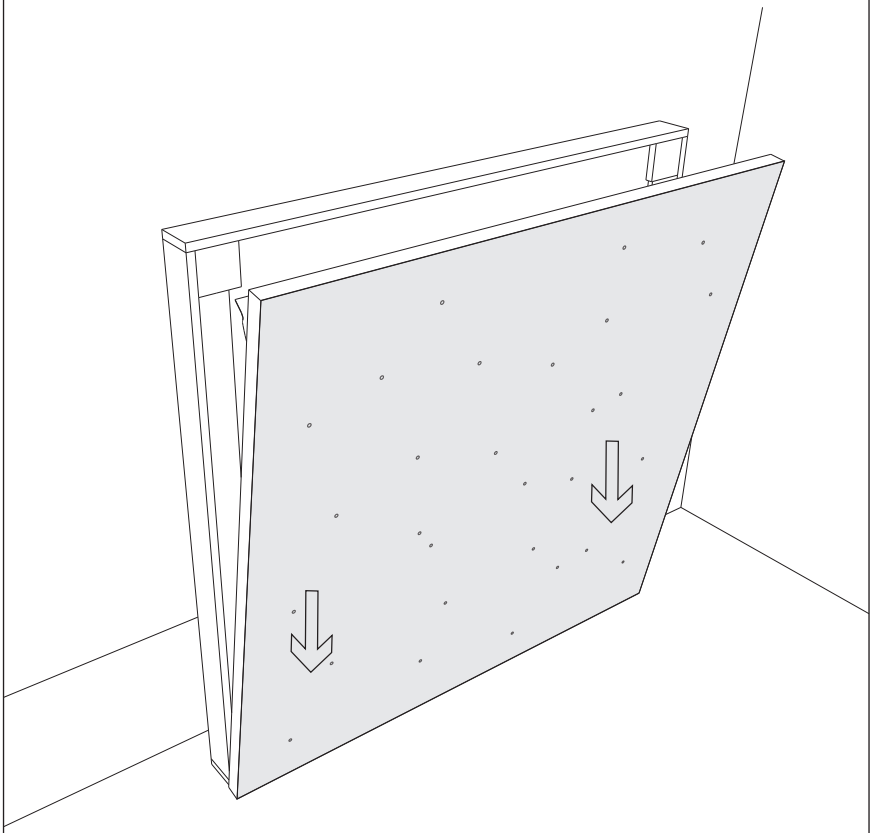

7

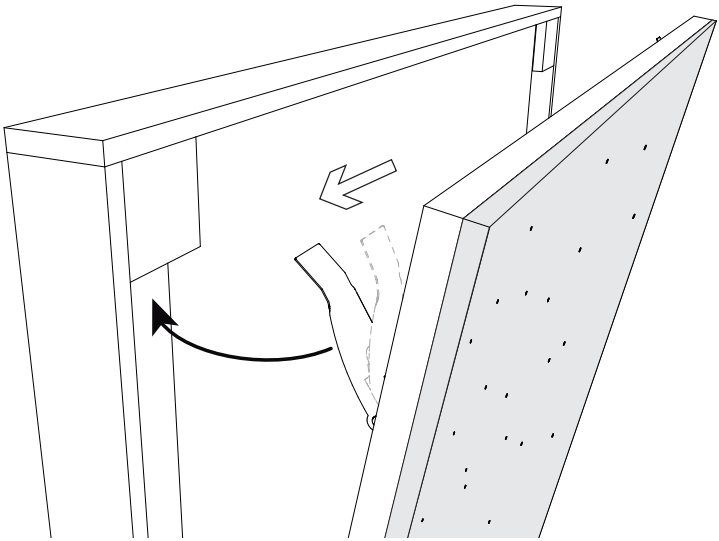

8

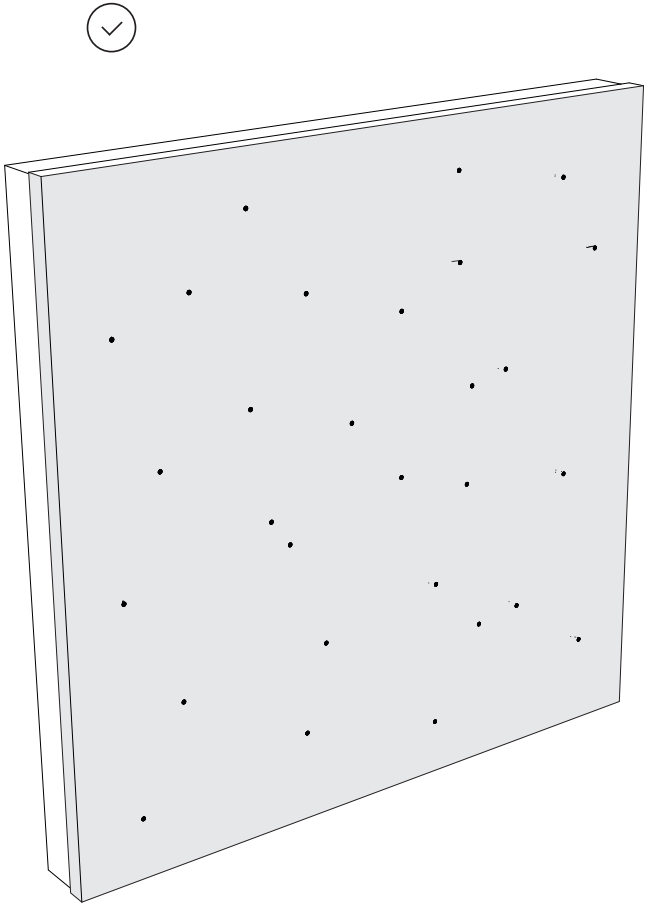

1 Controller Instalattion

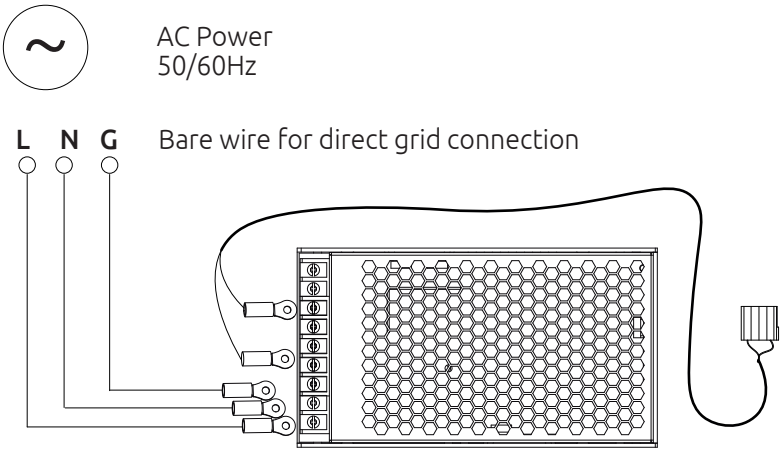

Terminal Pin PSU 48

Pin Nº.	Assignment	Pin Nº.	Assignment
1	AC/L	4~6	DC OUTPUT -V
2	AC/N	7~9	DC OUTPUT +V
3	G ⏚		

Terminal Pin PSU 96

Pin Nº.	Assignment	Pin Nº.	Assignment
1	AC/L	1 , 2	DC OUTPUT -V
2	AC/N	3 , 4	DC OUTPUT +V
3	G ⏚		

i Cosmos CS Controller is not included, purchased separately.

2

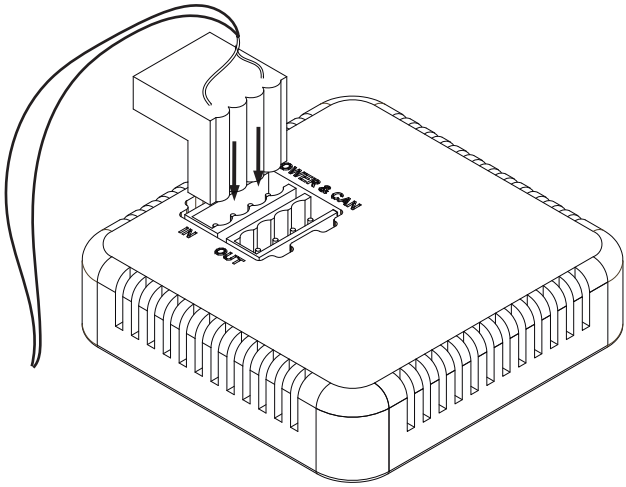

3

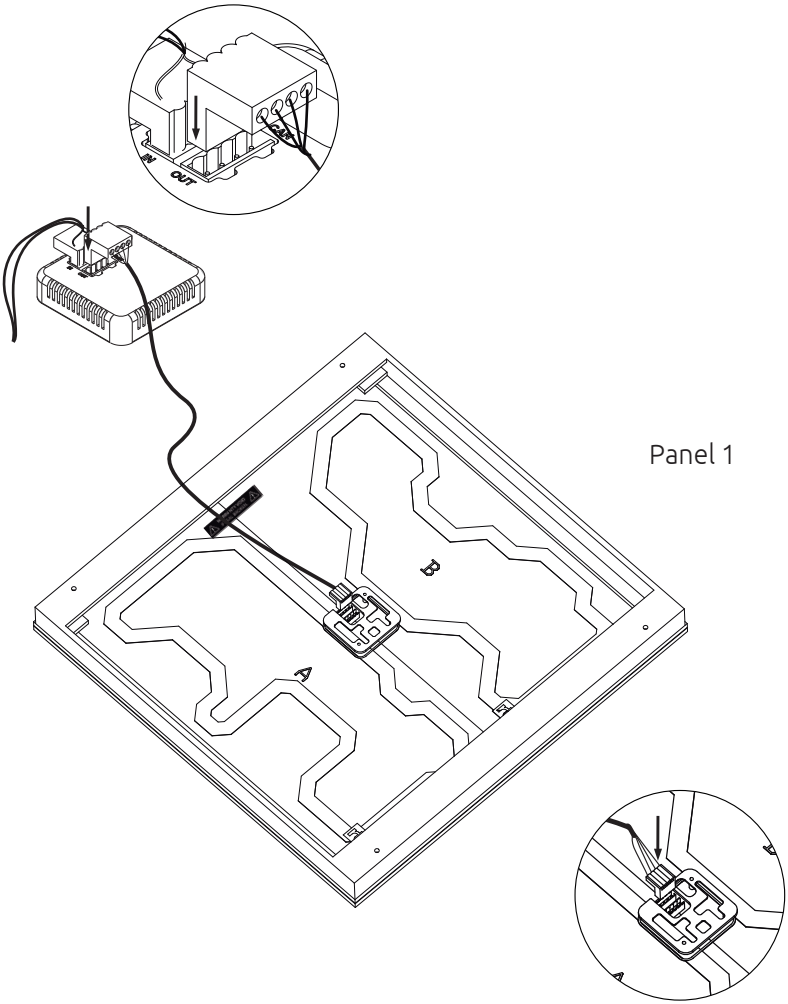

4

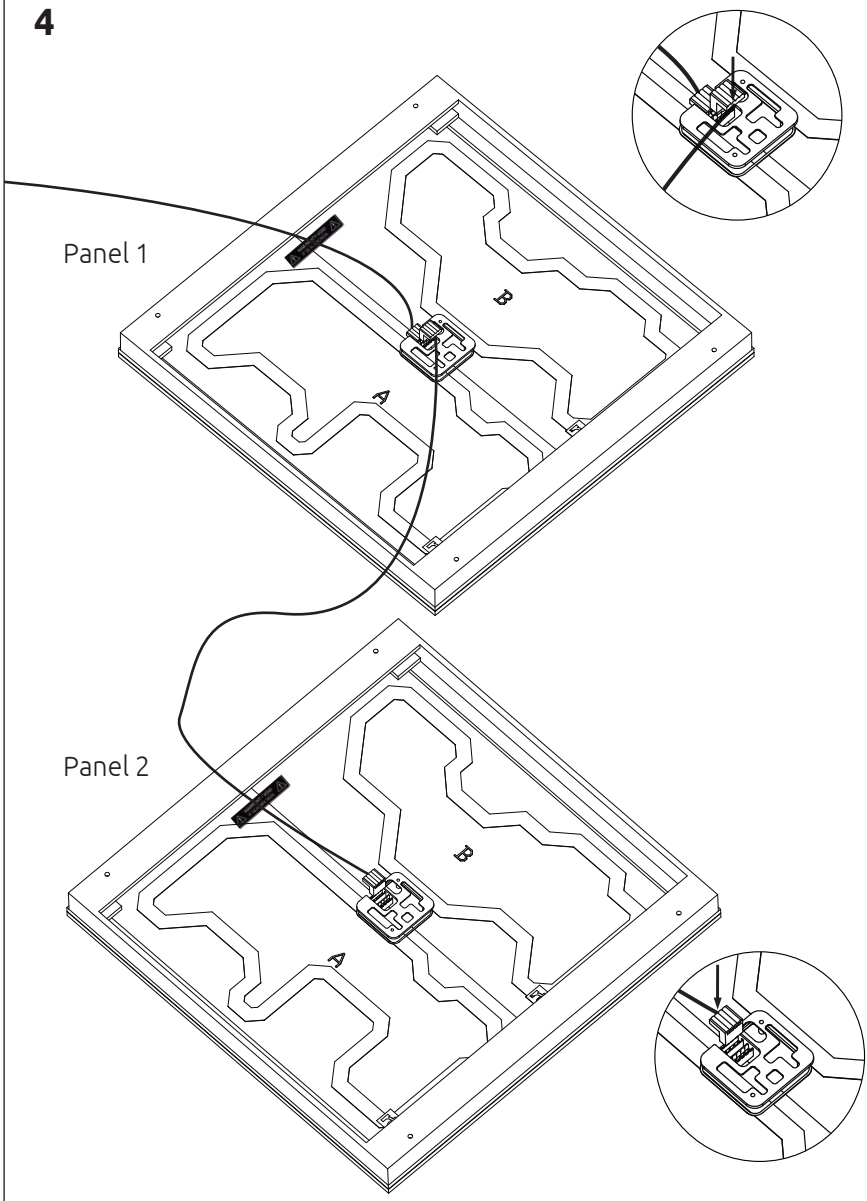

i Repeat this step, connecting all your Cosmos panels (up to a maximum of 96 panels in series)

5

Last Panel

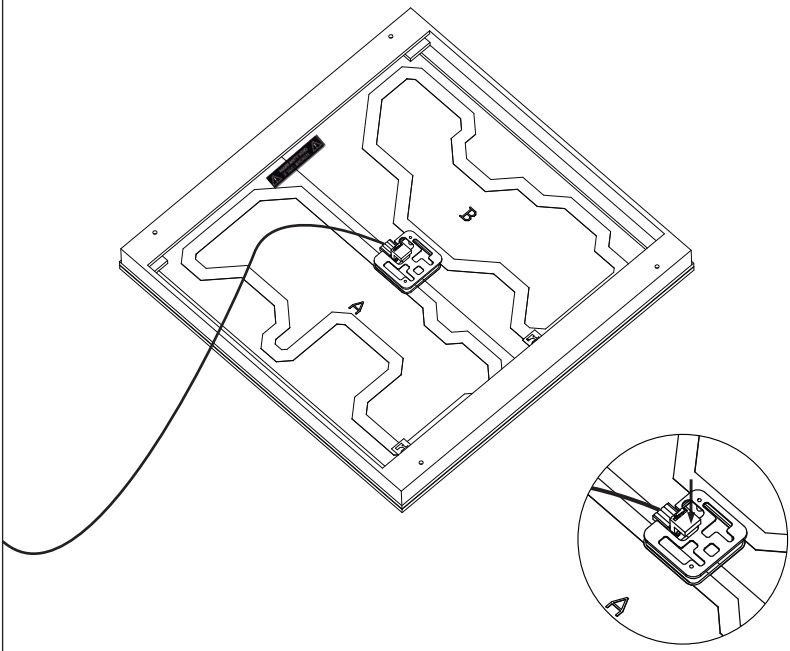

i On the last panel in the series, you must place the supplied end terminal in the "Out" connection

1 Using the App

Cosmos CS
by Artnovion Lda

Scan the QR code
(available on the box).

Or

Download on the App Store

GET IT ON Google Play

Download from the App Store
or Google Play

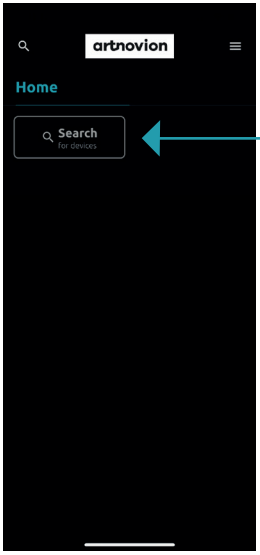

Turn on the Bluetooth on your phone and search for **"Controller".**

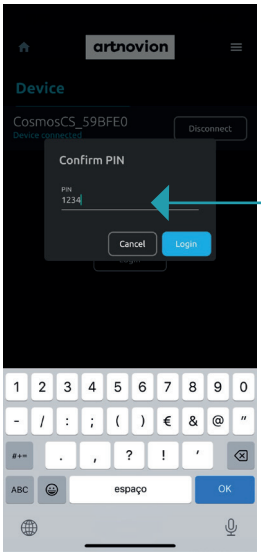

Default PIN = **1234**

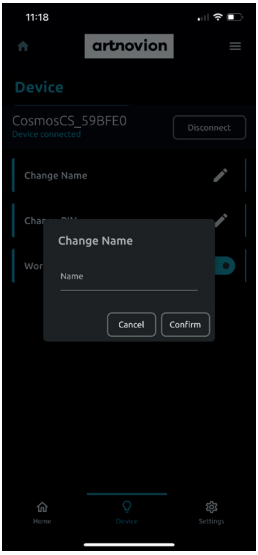

Change your name or PIN

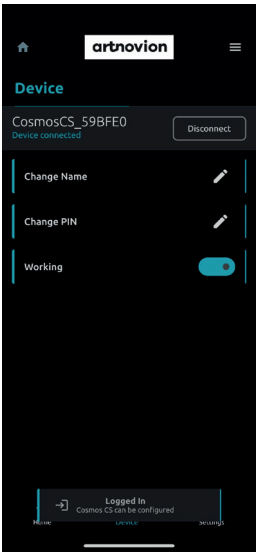

Turn on /off

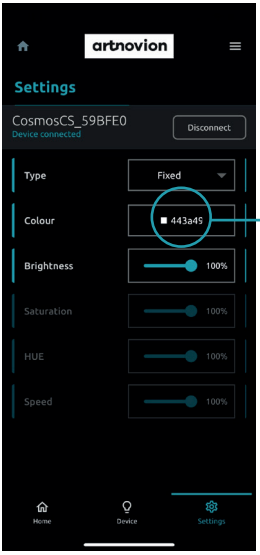

Pick colour

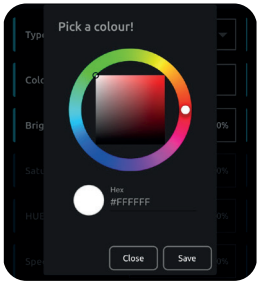

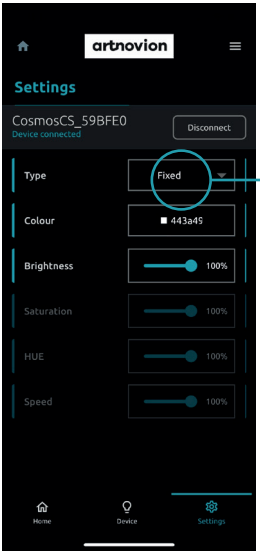

Choose and personalize an effect

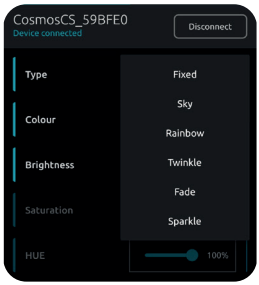

Passion for Acoustics

Rua das Vinhas nº 89 - Pavilhões 5-6
4580-750 Sobrosa, Paredes
Portugal

Guarantee policy

Dear customer,

All of our products have optimized shipping methods and undergo strict quality control methods to ensure that they reach you in perfect condition. In the unlikely event that your product develops a fault, please contact your vendor or our product support department at support@artnovion.com. Please note the following terms under which guarantee claims can be made:

1.These guarantee terms cover additional guarantee rights and do not affect your statutory warranty rights. We do not charge you for this guarantee.

2.Our guarantee only covers problems caused by material or manufacturing defects, and is restricted to the rectification of these defects or replacement of the product. The following are also excluded from our guarantee: compensation for transport damage, damage caused by failure to comply with the installation/assembly instructions, misuse or inappropriate use (such as using our panels for any other purpose, not using the panel in situ), failure to comply with the maintenance and safety regulations, installation of the product in areas with a relative humidity above or below 40-55% and temperatures exceeding 10-24 degrees, water or humidity damage, ingress of foreign bodies into the product, effects of force or external influences (e.g. Product being dropped or suffering impact, shade changes due to sunlight, smoke, fumes or leaks) and normal wear and aging resulting from proper maintenance of the product (e.g. loss of elasticity of the fabric).

3.This warranty does not cover differences between samples, photographs or models and the actual product. It also does not cover deviations between products that fall within acceptable tolerances, which are normal for handmade products, and do not prevent their use.

4.The guarantee is valid for a period of 2 years starting from the purchase of the product. Guarantee claims should be submitted before the end of the guarantee period, within two weeks of the defect being noticed. No guarantee claims will be accepted after the end of the guarantee period. The original guarantee period remains applicable to the product even if repairs are carried out or parts replaced. Such cases do not result in an extension of the guarantee period, and no new guarantee will become active for the work performed or parts fitted.

5. In order to assert your guarantee claim, contact your vendor or our product support department with the following information: Copy of sales receipt or another dated proof of purchase and a description of the nature of the problem in as much detail as possible. If the defect is covered by our guarantee then the procedure to repair or replaced your product starts immediately.

Of course, we are happy to offer a chargeable repair or replacement service for any defects that are not covered by the scope of this guarantee, or that are no longer covered. To use this service, please contact our product support department.

hello@artnovion.com
www.artnovion.com